SYSTEM SIZE:

BILL OF MATERIALS		
EQUIPMENT	QTY	DESCRIPTION
SOLAR PV MODULE		
INVERTER		
SUB PANEL		
TRUNK CABLE/CONN		

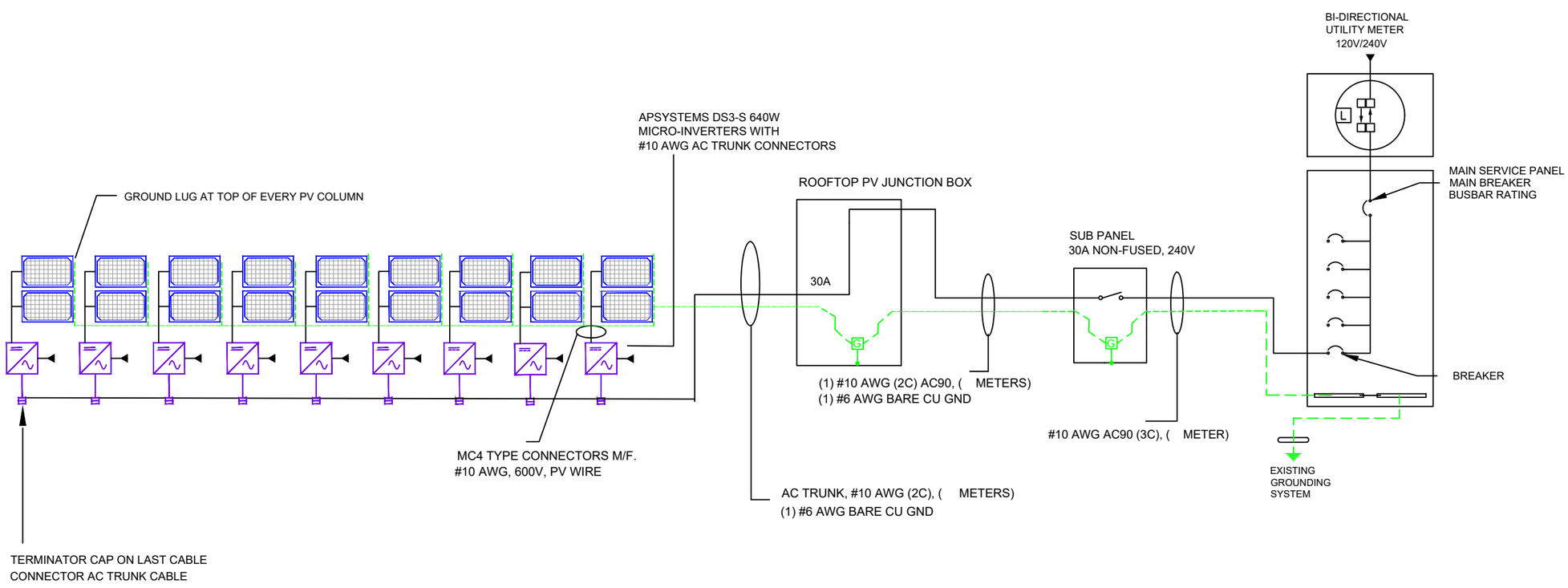

1 ELECTRICAL LINE DIAGRAM

NOTE:
MICROINVERTERS ARE RAPID SHUTDOWN

ENGINEER OF RECORD INFO

VERSION		
DESCRIPTION	DATE	REV
DRAFT		

PROJECT NAME

SHEET NAME
ELECTRICAL LINE DIAGRAM

SHEET SIZE
ANSI B
11" X 17"

SHEET NUMBER